REVISIONS				
ZONE	REV	DESCRIPTION	DATE	APPROVED

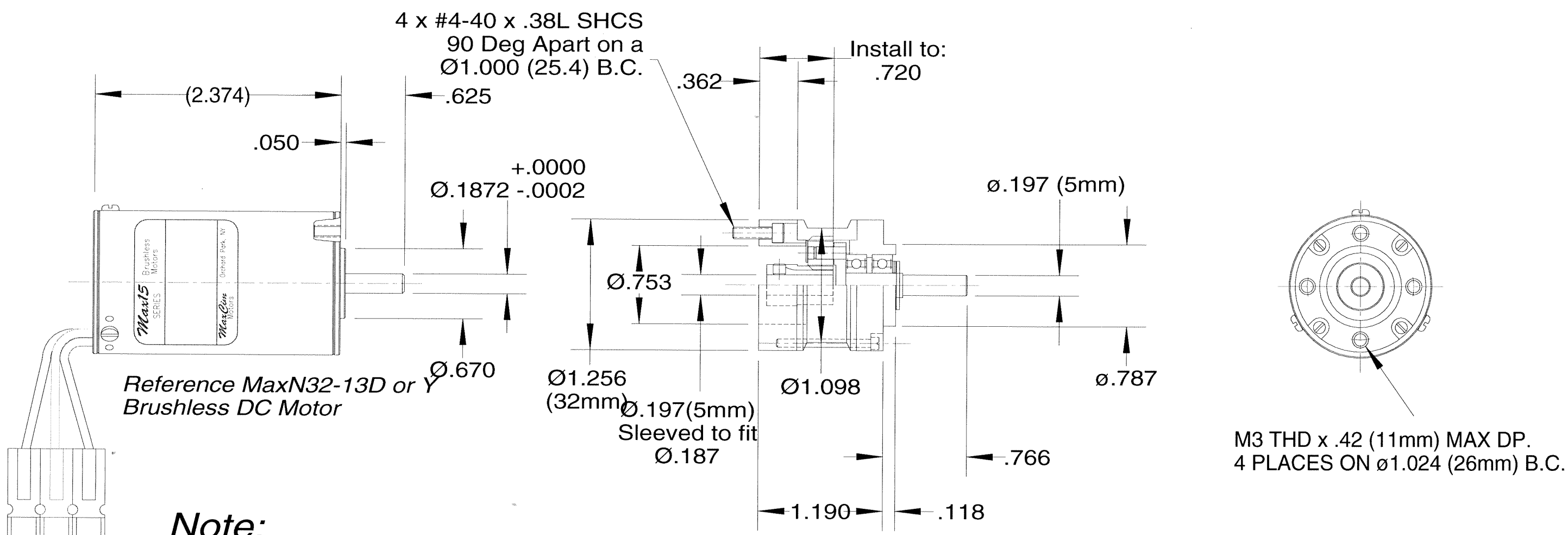

Note:
The Gearbox is supplied installed on the motor

		UNLESS OTHERWISE SPECIFIED DIMENSIONS IN INCHES	INTERPRET DRAWING PER ANSI Y14.5M-1994	MODEL NO. *Max15 Series*		
		.XX ± .01 .XXX ± .005	MATERIAL	PREPARED	T. CIMATO	11/11/02
		ANGULAR ± 1°		CHECKED		
		FILLETS .015 RAD		ENGR	T. CIMATO	11/11/02
		EDGES .010 RAD OR CHAM		MFG		
		SURFACE ROUGHNESS PER ANSI Y14.36 & B46.1 125		QUAL		
NEXT ASSEMBLY	USED ON	PART TO BE FREE OF BURRS AND SHARP EDGES				

MaxCim Motors, Inc.
ORCHARD PARK, NY 14127

Planetary 3.7:1 Gearbox

SIZE	CAGE NO.		REV
B		G20006	
SCALE 1:1			SHEET 1 OF 1